HVDC-Flexible in China

国家电网公司
STATE GRID
CORPORATION OF CHINA

Content

- ***SGCC and CET Overview***
- HVDC Flexible Technology
- Comparison of Conventional HVDC and Flexible HVDC
- Applications of Flexible HVDC
- Flexible HVDC in China

Overview of SGCC

国家电网公司
STATE GRID
CORPORATION OF CHINA

Forbes Global 500 **7th**	**Annual Electricity Sales** **3522.7 Billion kWh**	**Transmission Lines Total Length** **771,000 km**
Geographic Coverage of China **88%**	**Annual Revenues** **341.5 Billion USD**	**Substation Capacity** **3,030,000 MVA**
Population Coverage of Service **1.1 Billion**	**Total Asset** **426.7 Billion USD**	**Number of Employees** **1.86 million**

Service Coverage of China

State Grid Dispatch Center

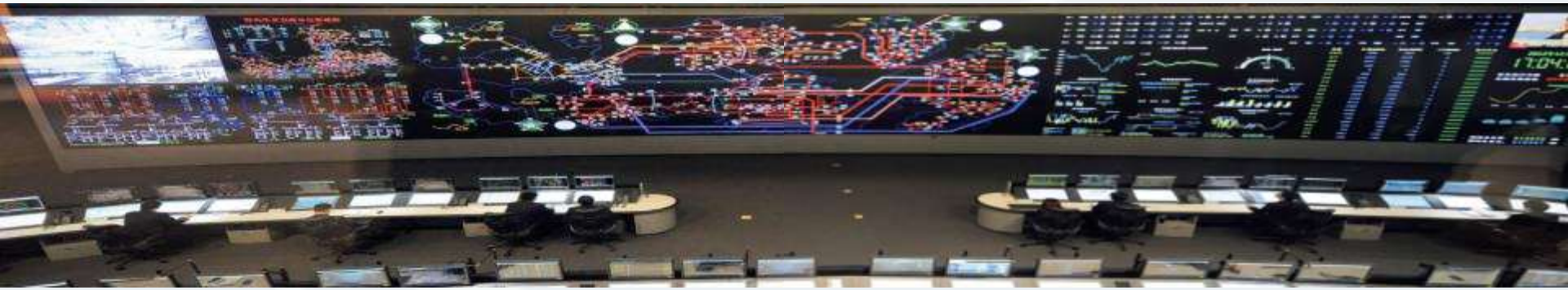

Overview of CET

China Electric Power Equipment and Technology Co., Ltd.(CET)

- ◆CET is the operation platform and executor for SGCC to carry out international EPC business.
- ◆Relying on the advanced technical capabilities and operating experience of SGCC in fields such as UHV and smart grid, CET exploits its comprehensive advantages in capital, management and brand and implements strategic cooperation with domestic and foreign enterprises.
- ◆CET actively participates in the international power engineering market, aspiring to become a world-class EPC contractor.

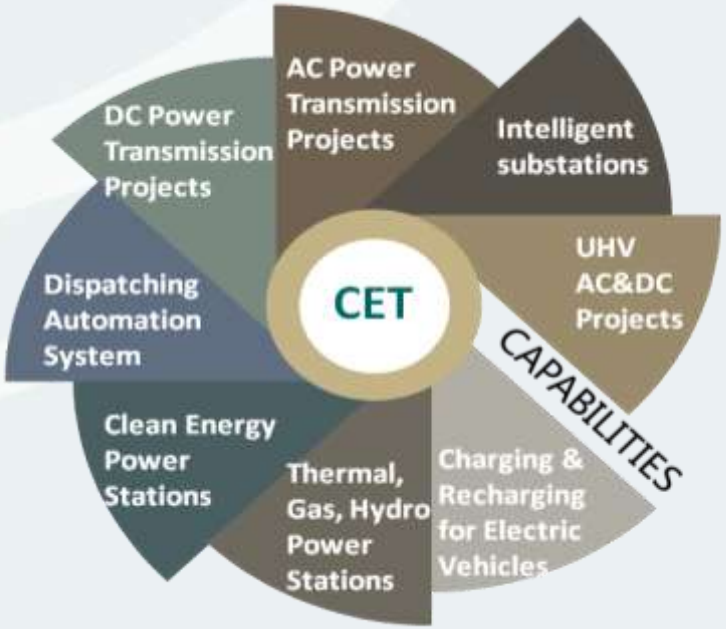

Integrated Solutions for HVDC Projects

国家电网公司
STATE GRID
CORPORATION OF CHINA

- **100% SGCC own technology** and intellectual property right
- Full package solution for **Design, Engineering, Construction, Commission, Operation and Maintenance**
- Core technology for key HVDC equipments manufacturing
- Full range HVDC solutions from **±125kV to ±1100kV**
- Leading-level know-how of HVDC system design
- Integrated project solution for different clients
- Outstanding performance of project operation
- Strong financing capability

Content

- SGCC and CET Overview
- ***HVDC Flexible Technology***
- Comparison of Conventional HVDC and Flexible HVDC
- Applications of Flexible HVDC
- Flexible HVDC in China

HVDC Technology

The demand for secure, reliable and sustainable energy is increasing, human being wants technologies to deliver the energy with lower environmental impact, greater reliability and increased availability.

HVDC technology is an old technology. It had been developed in 1930s in Europe. It has been used primarily for bulk electrical transmission over long distances for interconnecting separate power grid, hydro power and thermal power excavation. Till now, there are more than 100 HVDC projects in operation all over the world and about 1/3 of them are in China.Once installed, HVDC transmission systems often form the backbone of an electric power system, combining high reliability with a long, useful life.

HVDC technology is also a new technology. HVDC light is a kind of new technology and developed by Europe at the end of 20th century. It had been used to transmit power by overhead line and ground and submarine cables for offshore links to wind farms and oil and gas platforms.

HVDC Technology

What is HVDC Flexible

VSC-HVDC（Voltage Source Converter)

ABB: **HVDC Light**

Siemens: **HVDC Plus**

China: HVDC Flexible

VSC-HVDC in combination with cables or overhead lines makes transmission systems technically and economically viable over long distance.

In 1997, the first VSC-HVDC project(Hallsjon, 3MW , 2×10kV) was in operation by ABB.

HVDC Technology

Technical Features

- ◆Integrating renewable energy, hydro, wind and solar into the grid system
- ◆Provision of electricity into well populated city centers
- ◆Enabling remote load connections such as island, offshore platform
- ◆Overcoming limits in the new right-of way by land and sea
- ◆ Environment friendly (noise, radio intervention, magnetic field)
- ◆Compact design and short construction period
- ◆Stabilizing the transmission grid(STATCOM)

HVDC Technology

国家电网公司
STATE GRID
CORPORATION OF CHINA

DC Control & Protection

Converter Unit

- Converter Valve
- Interface Transformer
- Cooling System
- Others

AC Yard

- Start-up Resistor
- Bridge-arm Reactor
- AC Arrester/Switch
- Others

DC Yard

- Smoothing Reactor
- DC Arrester/Switch
- DC Bushing
- Others

HVDC Technology

VSC-HVDC Converter

One-storey layout

Compact and flexible station layout

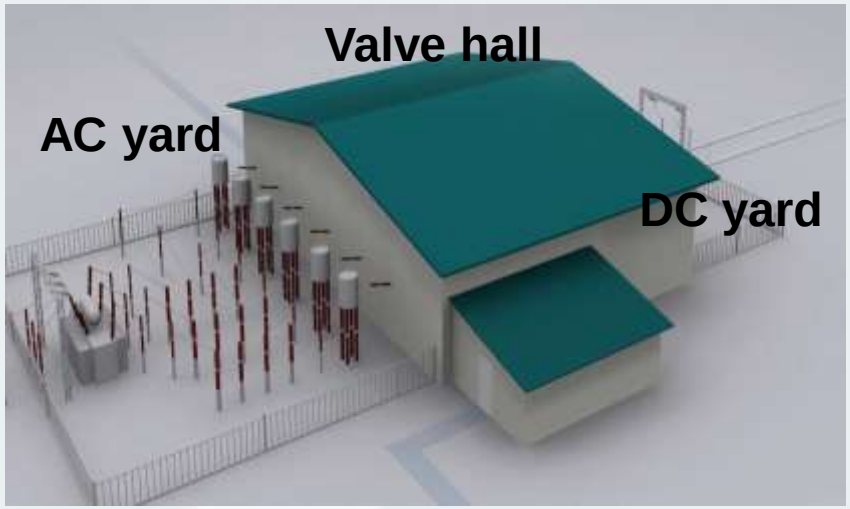

Two-storey layout

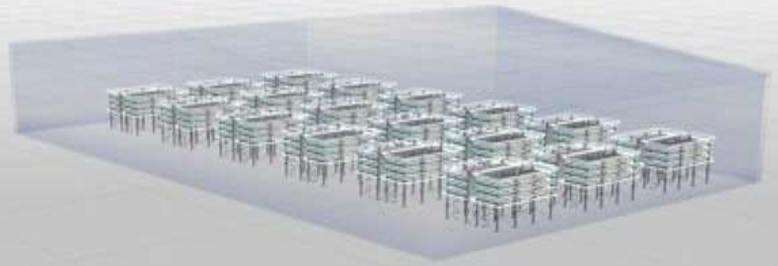

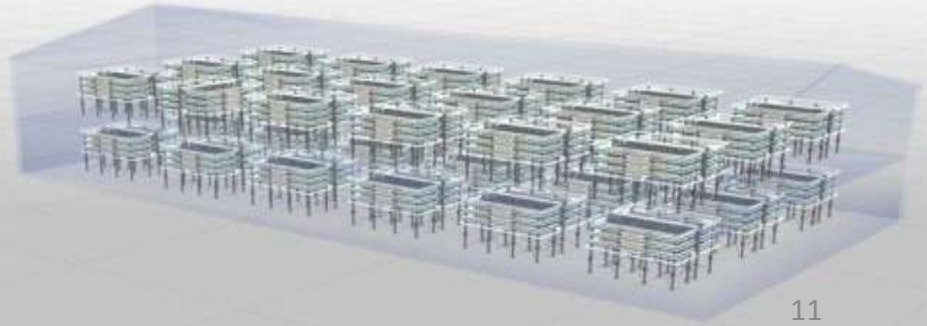

HVDC Technology

Weakness of HVDC flexible

Capacity of IGBT Module (50-2500MW)

Expensive Underwater Cable or Underground Cable

Mass Impregnated HVDC Cable

Complex Underwater cable laying

High loss

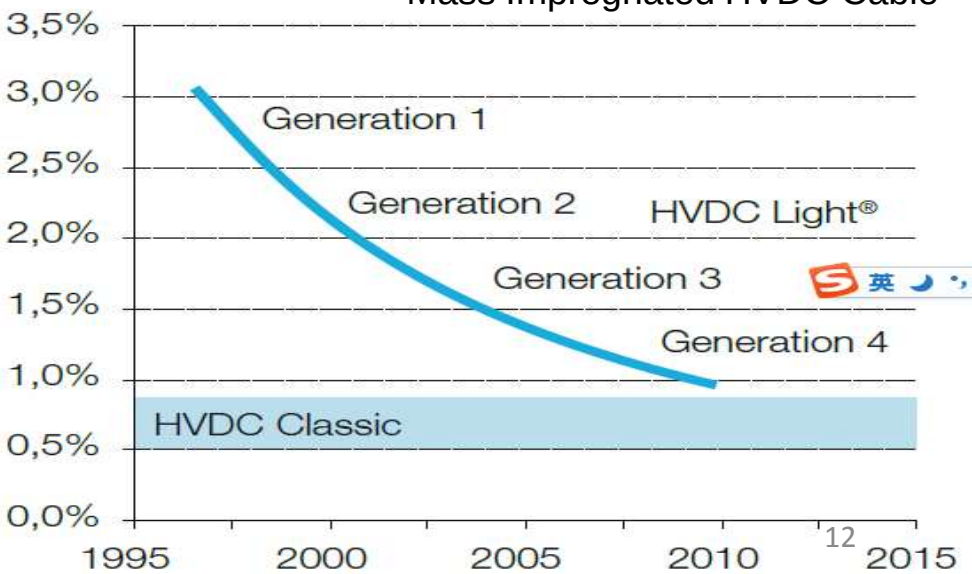

Project Performance

Project	Year	Power MW	Voltage kV	Voltage at Ends	Current A	Length km	Purpose
Hellsjon	1997	**3**	**±10**	10/10	150	10	Test
Gotland	1999	**54**	**±80**	80/80	350	2×70	Wind Farm/Cable
Directlink	2000	**180**	**±80**	132/110	342	6×59	Interconnection
Tjaerebog	2000	**7.2**	**±9**	10.5/10.5	358	2×4.3	Wind Farm Demonstration
Eagle Pass	2000	**36**	**± 15.9**	132/132	1100	0(B-B)	Interconnection/ Cable
Cross Sound Cahle	2001	**330**	**± 150**	345/138	1175	2×40	Interconnection/ Cable
Murray Link	2002	**200**	**± 150**	132/220	1400	2×180	Interconnection/ Cable
TrollA	2005	**2×42**	**±60**	56/132	400	4×70	Subsea Cable
Estlink	2006	**350**	**±150**	400/330	1230	2×72	Interconnection/ Cable

Project Performance

Project	Year	Power MW	Voltage kV	Voltage at Ends	Current A	Length km	Purpose
Valhall	2010	**78**	**±150**	300/11	-	292	Subsea Cable
Nord E.ON 1	2009	**400**	**±150**	170/380	-	203	Wind Farm
Trans Bay Cable	2010	**400**	**±200**	400	-	88	City Center
Nanhui	2011	**18**	**±30**	35	300	10	Wind Farm
East West Interconnector	2012	**500**	**±200**	-	1250	-	Interconnection
DolWin1	2013	**800**	**±320**	150/380	1250	75/90	Wind Farm
Skagerrak HVDC	2014	**700**	**±500**	400	1400	140/104	Interconnection
Zhoushan	**2014**	**1000**	**±200**	**220**	**1000/500**	**148**	**Subsea Cable Interconnection**

Content

- SGCC and CET Overview
- HVDC Flexible Technology
- ***Comparison of Conventional HVDC and Flexible HVDC***
- Applications of Flexible HVDC
- Flexible HVDC in China

国家电网公司
STATE GRID
CORPORATION OF CHINA

Conventional Converter Station

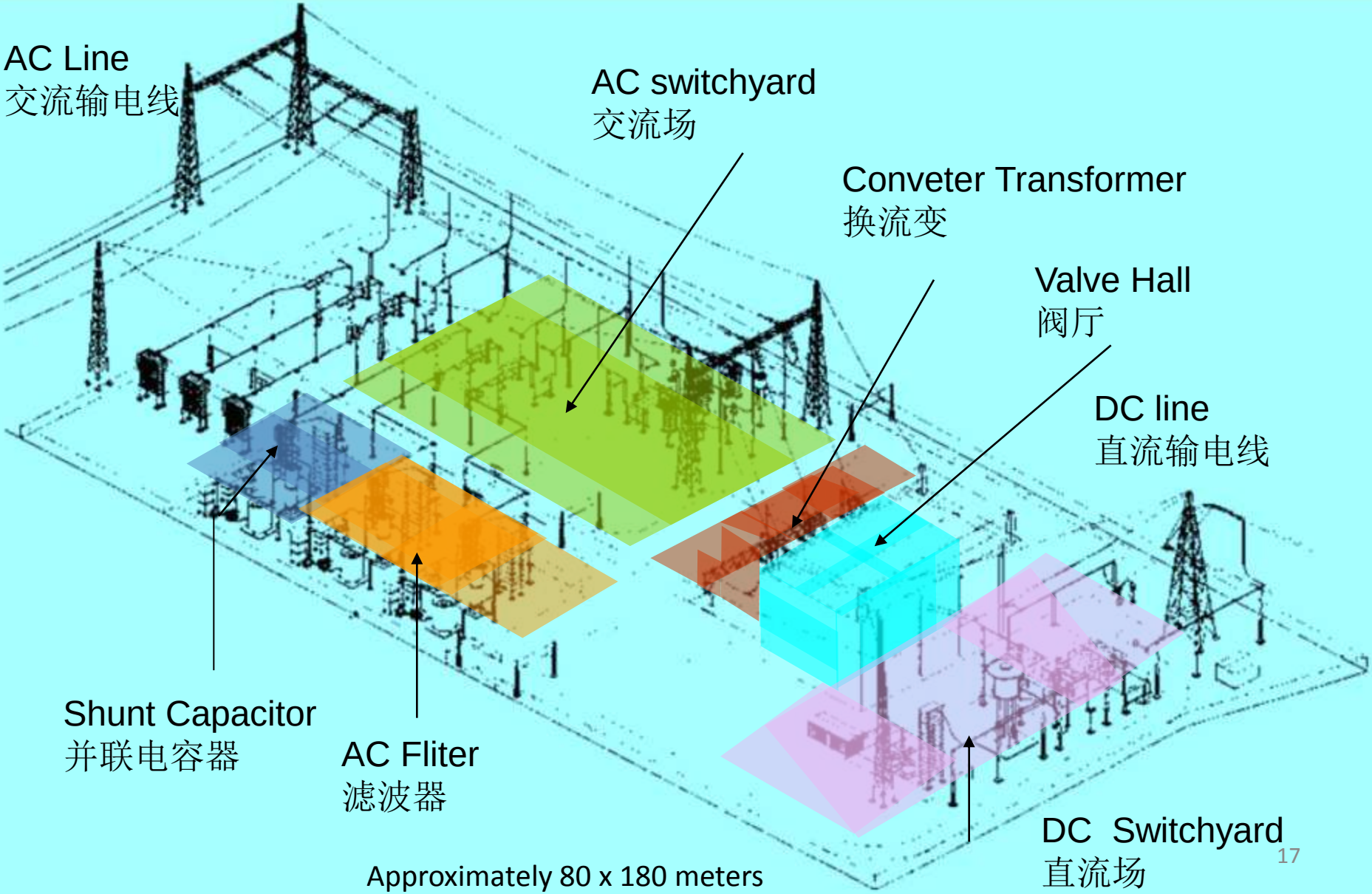

Approximately 80 x 180 meters

HVDC Flexible Converter Station

Daishan Converter Station

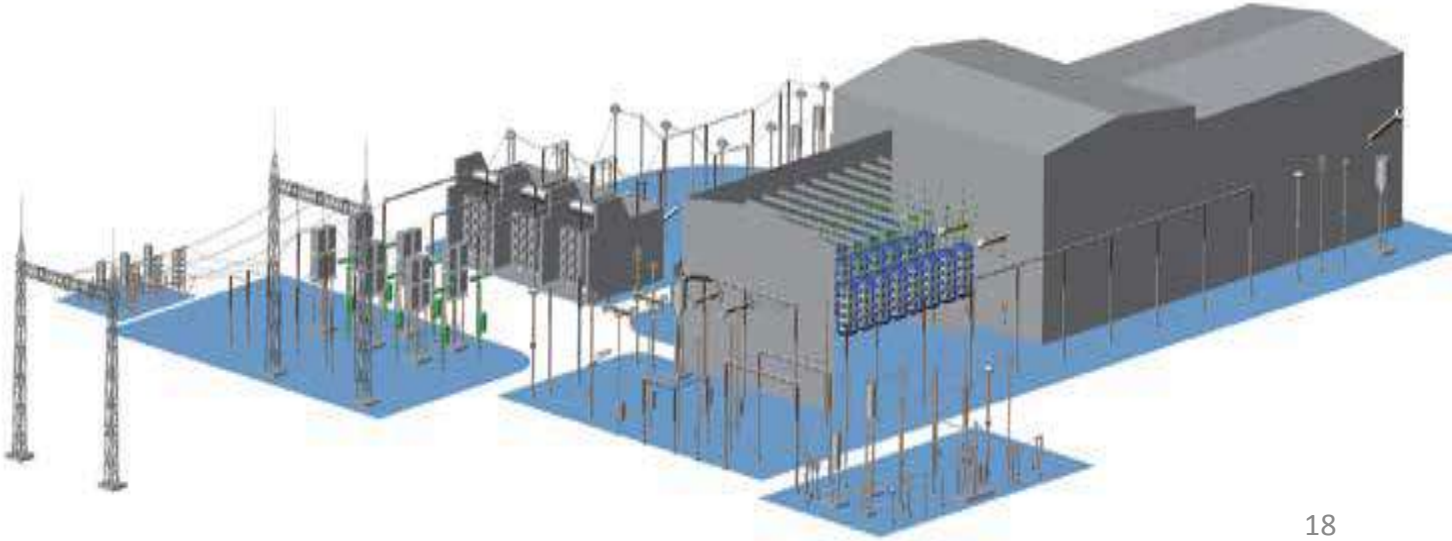

Comparison of Conventional HVDC and Flexible HVDC

Current source Converter
Conventional HVDC

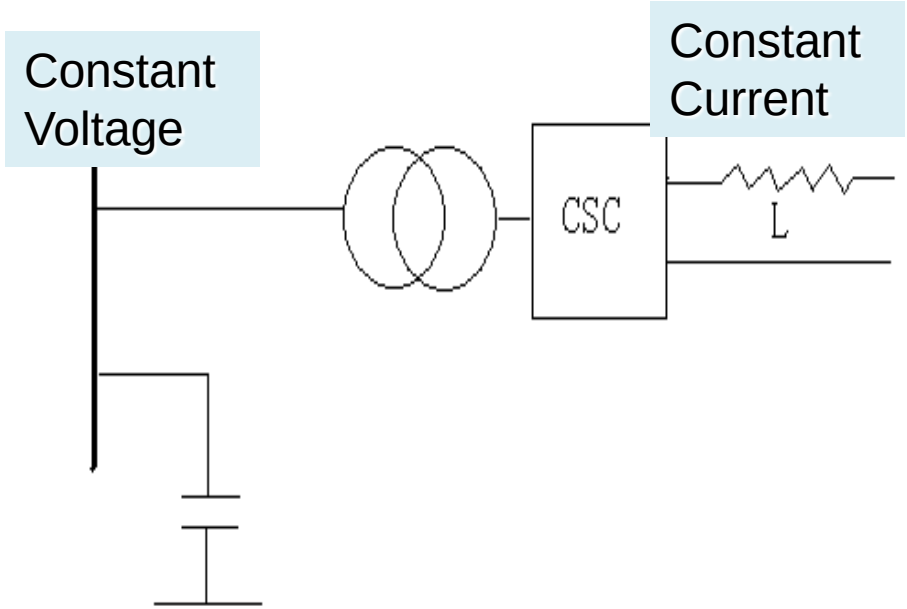

Voltage Source Converter
Flexible HVDC

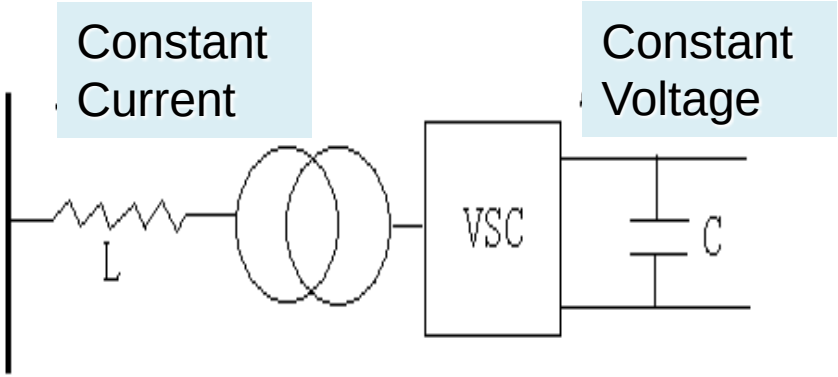

Thyristor

IGBT

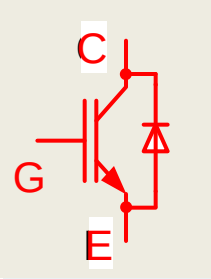

Comparison of Conventional HVDC and Flexible HVDC

Current source Converter Conventional HVDC

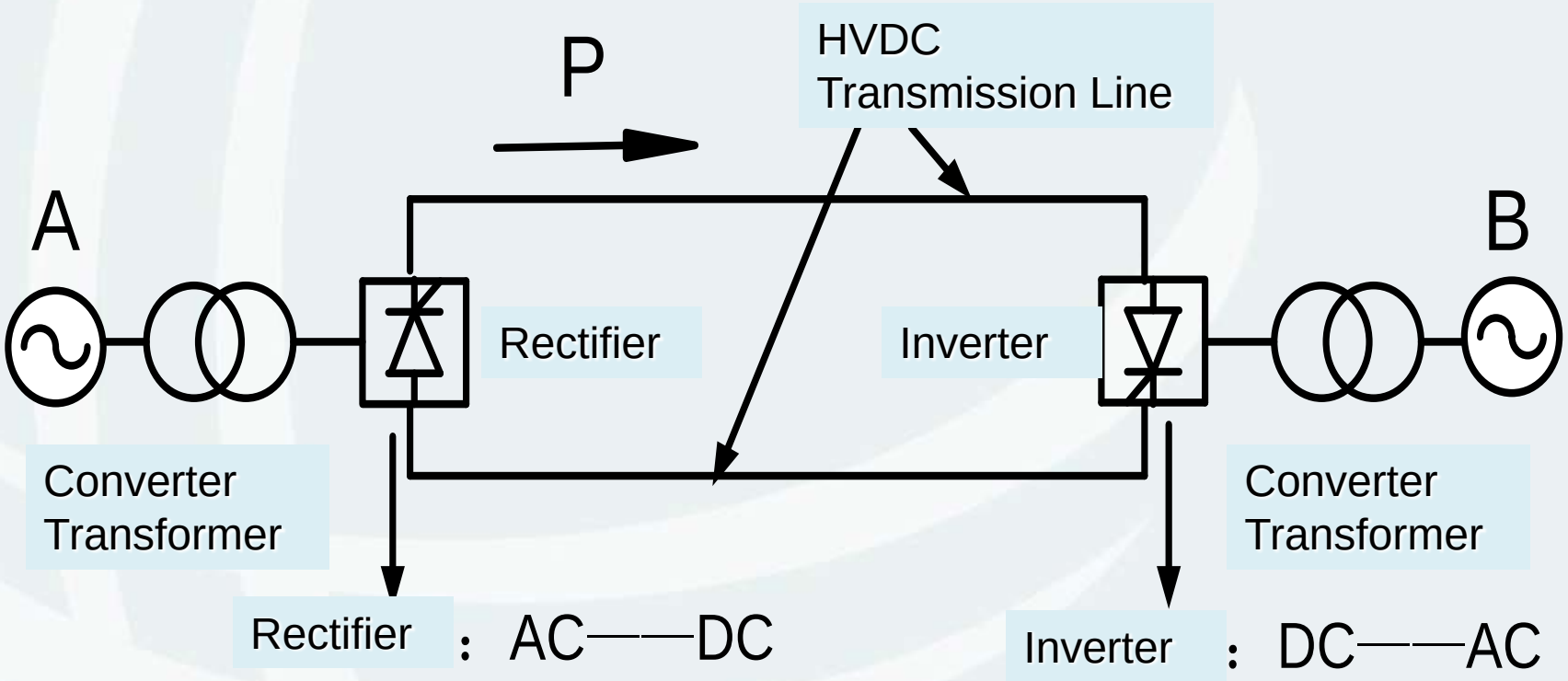

Comparison of Conventional HVDC and Flexible HVDC

Voltage Source Converter Flexible HVDC

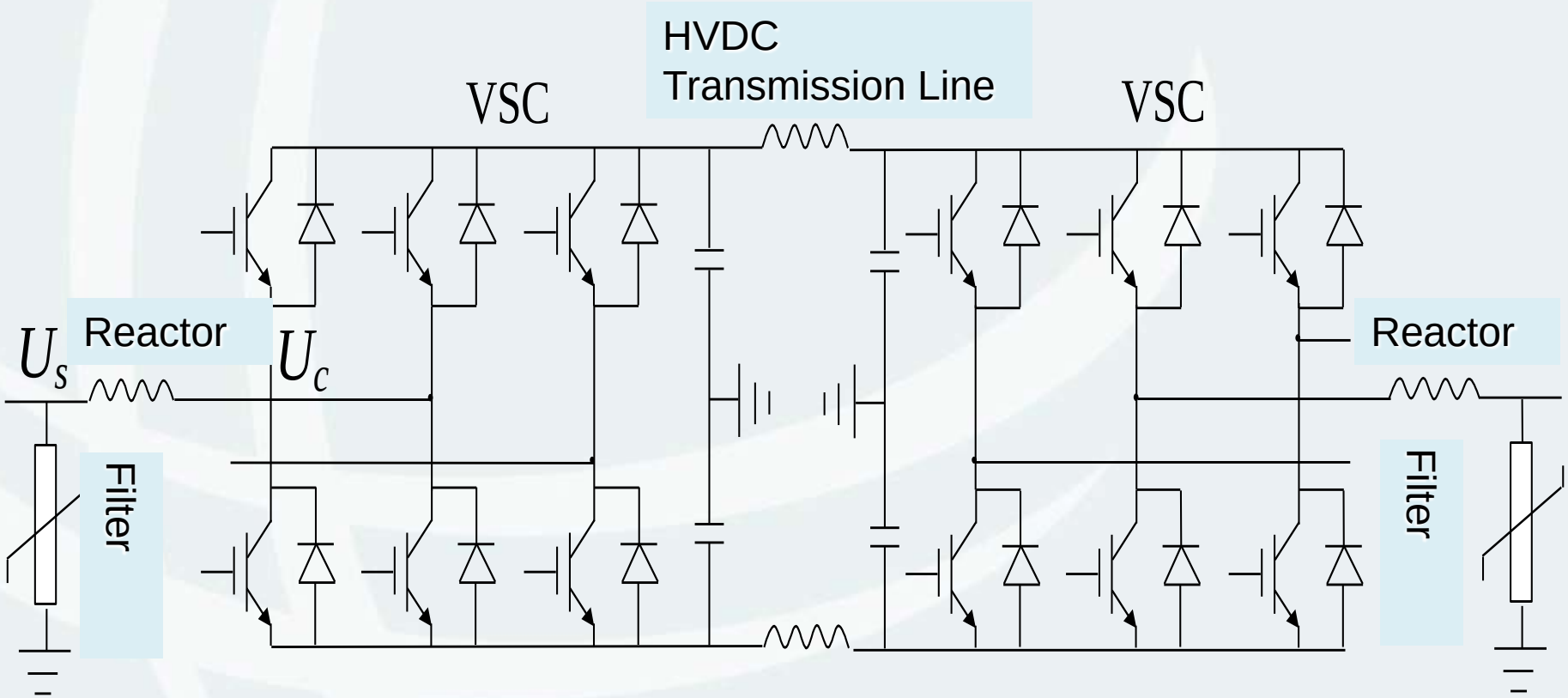

Comparison of Conventional HVDC and Flexible HVDC

Description	HVDC Flexible	HVDC Conventional
Semi Conductor	Fully controlled, IGBT	Half controlled, thyristor
Power control	Independent control of active and reactive power	Active power control
Powering weak or passive system	Yes	No
Dynamic voltage support	Yes	No
Filtering and Var compensation	Little or even no need	Yes
Multi-terminal	Easy	Difficult
Footprint	Small	Large
Communication	No communication	Yes
Loss	1%(C/S)	0.75%(C/S)
Type of Conductor	Cable	Conductor

Content

- SGCC and CET Overview
- HVDC Flexible Technology
- Comparison of Conventional HVDC and Flexible HVDC
- ***Applications of Flexible HVDC***
- Flexible HVDC in China

Applications of Flexible HVDC

国家电网公司
STATE GRID
CORPORATION OF CHINA

Island, cities or industry in remote locations

- Can operate into very weak or even passive network
- Increase availability of electric power supply
- Reduce carbon emission associated with local power generation
- Small footprint and light weight due to compact converter structure

Applications of Flexible HVDC

国家电网公司
STATE GRID
CORPORATION OF CHINA

Key source of large-scale renewable energy supply

- An effective solution for offshore wind integration farms
- No transmission distance limit compared to AC solutions
- Reactive power control and voltage support
- Compact design

Atlantic wind connection(AWC)

Expected date of Commissioning	Long-term
Rated capacity	7000MW in total
Cable length	483km-subsea cable
Type	VSC-HVDC

Applications of Flexible HVDC

- Eliminate the difficulties to secure new right-of-way
- No visual or environment impact using cable
- No contribution to system short-circuit levels

Dalian city in-feed

Commissioning year	2013
Rated capacity	1000MW
Rated DC voltage	±320 kV
Cable length	43 km-subsea cable
Type	VSC-HVDC

Applications of Flexible HVDC

国家电网公司
STATE GRID
CORPORATION OF CHINA

- No change of DC voltage polarity during power reversal
- Increase reliability and security of all grids involved

Zhoushan multi-terminal scheme

Commissioning	2014
Rated capacity	400/300/100/100/100MW
Rated DC voltage	±200 kV
Cable length	134 km-subsea cable
Type	VSC-HVDC

Applications of Flexible HVDC

Interconnections

+/-200MW East-West Interconnector (500MW)

- Power can flow in both direction
- Networks stability
- Underground and underwater cable transmission over distance in the range of 50-100kM
- Black-start capability

Content

- SGCC and CET Overview
- HVDC Flexible Technology
- Comparison of Conventional HVDC and Flexible HVDC
- Applications of Flexible HVDC
- ***Flexible HVDC in China***

Flexible HVDC in China

2/3 coal resources, wind power, solar power located in the North and North-West of China

4/5 of hydropower located in the South-West of China

Over 2/3 of the power demand concentrates in the East and Central of China

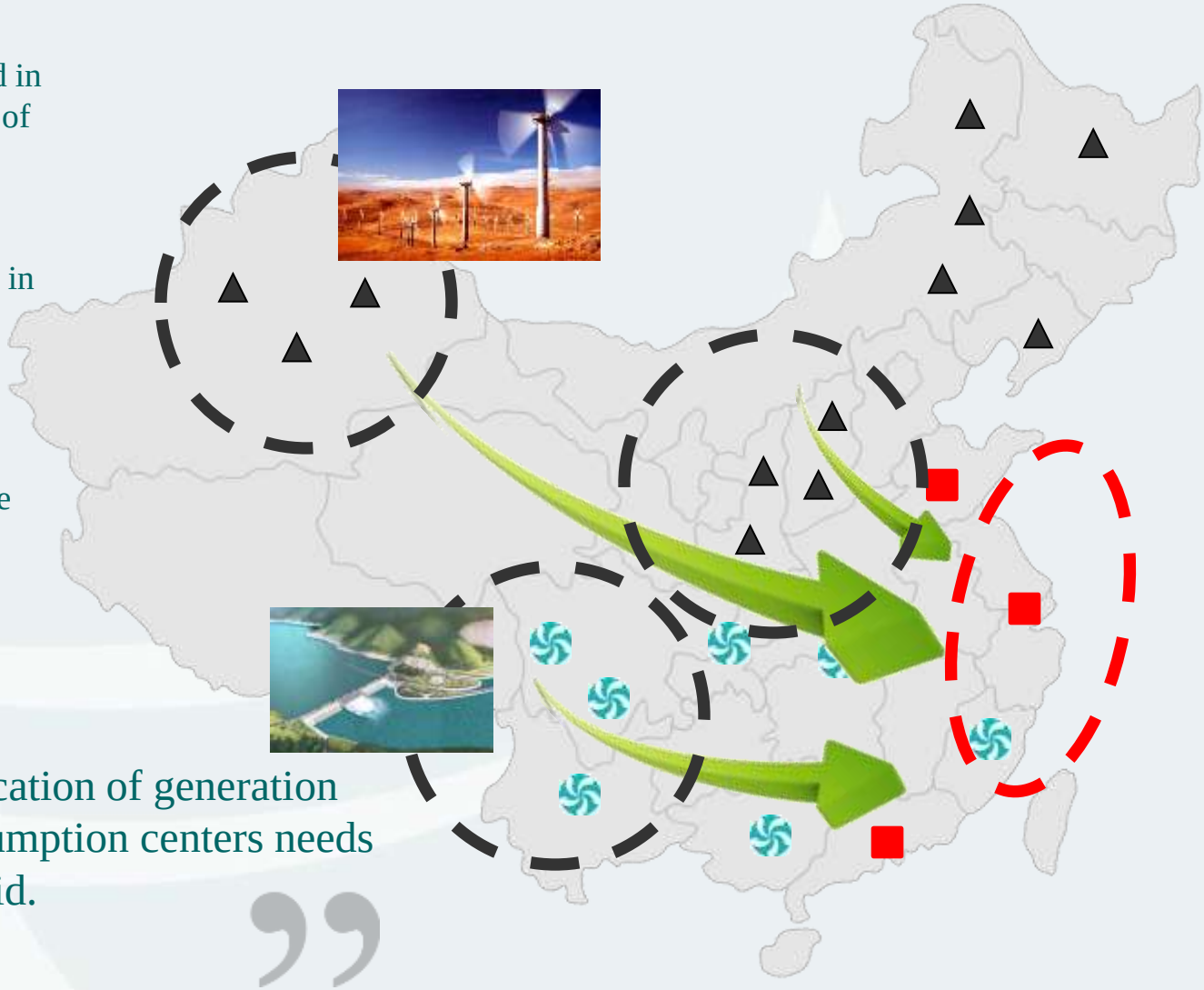

"The imbalance allocation of generation resources and consumption centers needs strong and smart grid."

Flexible HVDC in China

China's grid in the future

- **By 2015**
- North China-central china-east china with 1000kV AC synchronous interconnection
- West China-Northeast-CSG with DC asynchronous networking
- Cross regional power transmission:260GW
- UHV power transmission:150GW
- Wind power access to grid: 100GW

- **By 2020**
- More than 20 UHV lines
- Cross regional power transmission:420GW
- UHV power transmission:330GW
- Wind power access to grid: 200GW

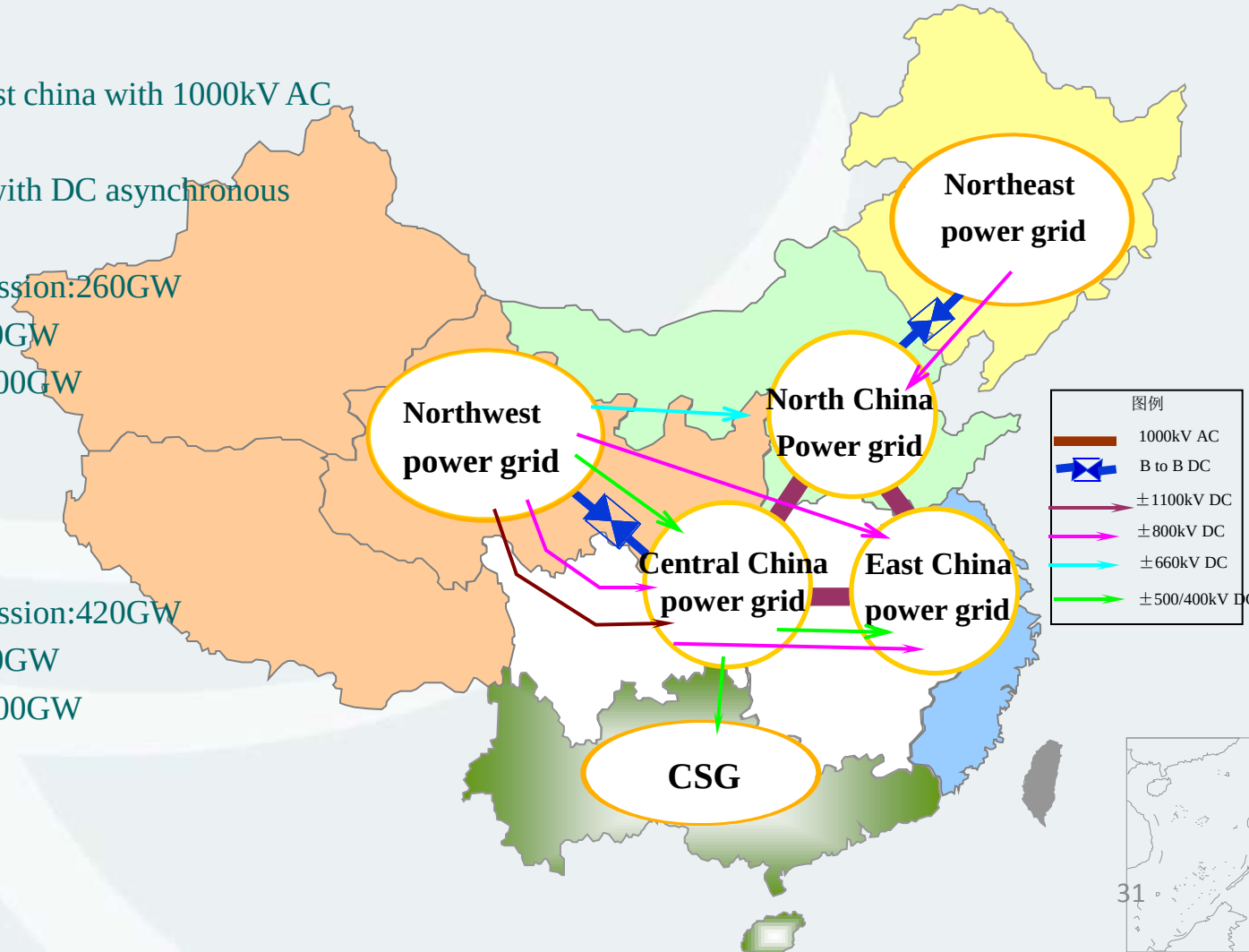

Flexible HVDC in China

M2000 VSC-HVDC converter

◆Up to 1000MW/±320kV, using 300V/1500A IGBT

◆Easily scalable with modular design

◆Superior inflammability conforming to UL94

◆Excellent seismic performance (0.2g typical)

◆KEMA certification

◆Easy assembly and maintenance

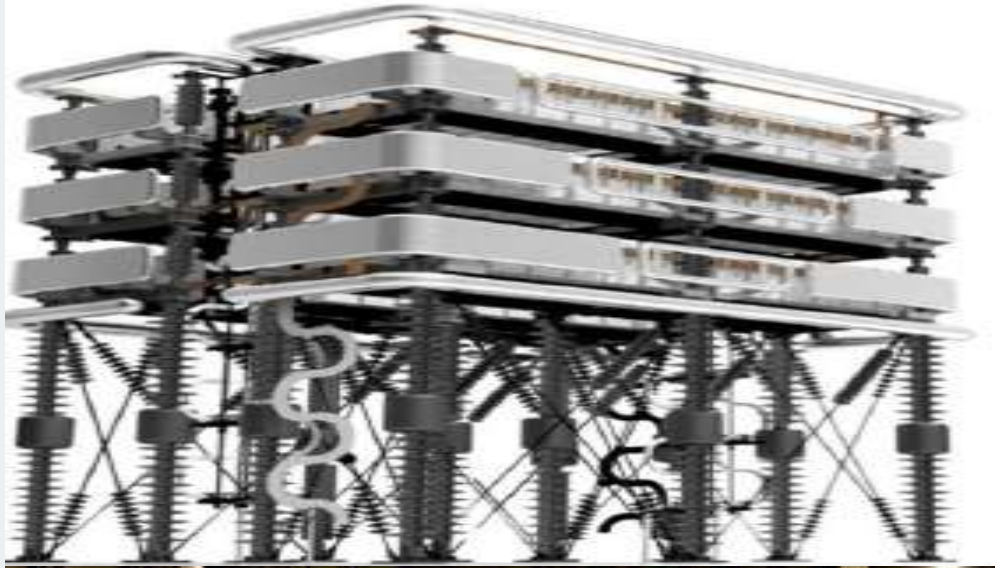

Flexible HVDC in China

国家电网公司
STATE GRID
CORPORATION OF CHINA

Interface transformer

- Voltage: 220/330kV
- Capacity: 350MVA
- Single-phase oil-immersed type

Bridge arm reactor

- Inductance: 104mH
- Dry-type air-core

Valve cooling system

- Cooling capacity: 4320kW
- Flow rate: 369m^3/h
- Ambient temperature: -21.1~38.1° C

Flexible HVDC in China

国家电网公司
STATE GRID
CORPORATION OF CHINA

Power System Power Electronics Lab

- Type tests for HVDC valves
  - LCC-HVDC valve up to ±1100kV/6250A
  - VSC-HVDC valve up to ±500kV/2000A
- Type tests for the whole family of FACTS valve, incl. SVC, TCSC, SCR, etc.
- Accredited by China National Accreditation Board for Conformity Assessment (CNAS)

AC voltage test facilities
600kV/5A

DC voltage test facilities
±2400kV/300mA

Synthetic operational test facilities
80kV/7500A

IGBT valve test facilities
20kV/2000A

Flexible HVDC in China

国家电网公司
STATE GRID
CORPORATION OF CHINA

Laboratory of DC Grid Technology & Simulation

- System analysis and design verification
- Verification of Control & Protection system, MMC-Valve and VBC configuration
- Simulate up to 6000 SM's (up to ±500kV VSC-HVDC Scheme)
- Suitable for the simulation of up to 20-terminal VSC-HVDC system
- Scalable to simulate and verify a AC system with more than 300 buses

Flexible HVDC in China

Conventional HVDC Project of SGCC in operation

No.	Type	In operation	In Construction
1	±400kV	1	0
2	±500kV	7	2
3	±660kV	1	0
4	±800kV	4	1
5	BTB	3	0

Flexible HVDC in China

国家电网公司 STATE GRID CORPORATION OF CHINA

Flexible HVDC Projects in China

No.	Project name	Voltage	Capacity	Distance	Commissioning
1	Nanhui wind farm integration	±30kV	18MW	8.4km (land cable)	2011
2	Zhoushan five-terminal interconnection	±200kV	1000MW	141 (incl. 129km subsea cable)	2014
3	Xiamen Island power supply	±320kV	1000MW	10.7km (subsea cable	2015(under construction)
4	Yu-E HVDC Interconnection	±400kV	4x1250MW	BtB	2017(planning)

Typical Projects (Domestic)

国家电网公司 STATE GRID CORPORATION OF CHINA

Nanhui Demostration Project

- Links Nanhui wind farm to the Shanghai main grid
- C-EPRI undertook system design, equipment supply and project implementation, excluding civil works.

Main data	
Commissioning year	2011
Rated capacity	18MW
Rated DC voltage	±30kV
Cable length	8.4km land XLPE cable
Type	VSC-HVDC

Typical Projects (Domestic)

Zhoushan ±200kV Flexible HVDC Project (Completed)

Transmission Capacity	500+400+300+2x100 MM
Planned Construction Period	March 2013-June 2014
Total Length	140.4 km

Zhoushan ±200kV Flexible HVDC Project (Completed)

- Total electric power capacity: 1,000 MW
- The first Five-Terminal flexible HVDC transmission project in the world.
- Construction Period: 15 months, from March, to June, 2014
- Self-developed multi-terminal flexible HVDC technology by SGCC
- All equipment and material from Chinese manufacturers
- Hybrid DC and AC grid

Typical Projects (Domestic)

Xiamen Multi-terminal HVDC Project

- Rated at ±320kV/1200MW
- Upon completion, The reliability of electric power supply will be improved in Xiamen;furthermore, this project would have a significant influence on the development of VSC HVDC in China.

Commissioning year	Sep, 2015
Rated capacity	1000MW
Rated DC voltage	±320kV
Type	VSC-HVDC

Detail of Xiamen ± 320kV HVDC Project

国家电网公司 STATE GRID CORPORATION OF CHINA

Technical Specification for Converter Station

DC current	1600A	Converter Valve	Bipole, 500MW for each pole
Converter Transformer	(3+3)X176.7MVA	AC Substation	220kV/ 2 Transmission line
Connection Model	One pole, metal return 10kV	Construction Period	16 months

Technical Specification for Transmission Line

Transmission Line	2.1km overhead line+6.2km Cable+2.0km overhead line
Cable Type	XLPE Copper Condutor
Cable Size	1800m2(pole)+1600m2(return) (2X10.7kM+1X10.7kM)

Bird View of Converter Station

国家电网公司
STATE GRID
CORPORATION OF CHINA



国家电网公司
STATE GRID
CORPORATION OF CHINA